IMPORTANT NOTE: Use shrinkwrap to cover exposed terminals, see attached picture.

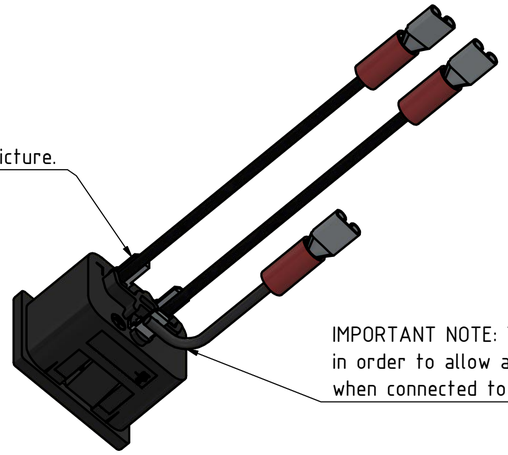

IMPORTANT NOTE: The wire connected to terminal "GND" must be soldered to the terminal in a 90° manner, in order to allow an arc to be formed, so that the stress on the harness is minimal, when connected to the ground spade connector on the PCB board.

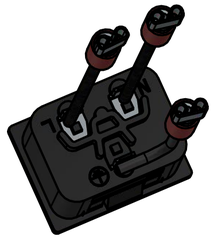

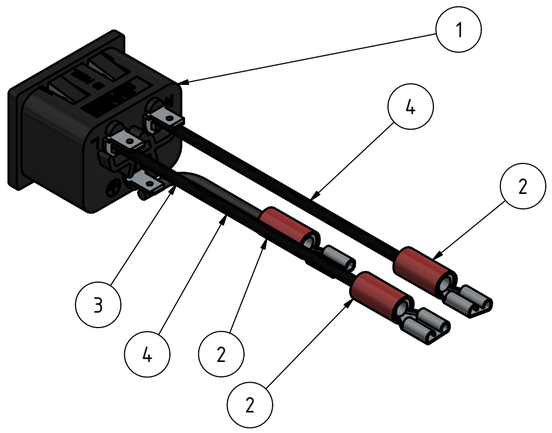

WIRING INSTRUCTIONS	
WIRE	PCB CONNECTOR
N	X5_108
L	X6_106
GND	X7_104

IMPORTANT INFORMATION: All wires must meet or exceed IEC 60320 C20 specification!

BILL OF COMPONENTS				
OBJECT	QUANTITY	DESCRIPTION	SUPPLIER	REFERENCE NO.
1	1	IEC socket C20	RS Components	811-7238
2	3	Insulated spade connector	RS Components	534-339
3	1	Wire 1.5mm2, length = 70mm, soldered to "GND" tab		
4	2	Wire 1.5mm2, length = 80mm, soldered to "N" and "L" tab		

	Datum	Name
Gezeichnet	05.03.2021	Wernegger
Kontrolliert		
Norm		

IEC AC Connector

IN100002854 | 1 | A2

Status	Änderungen	Datum	Name

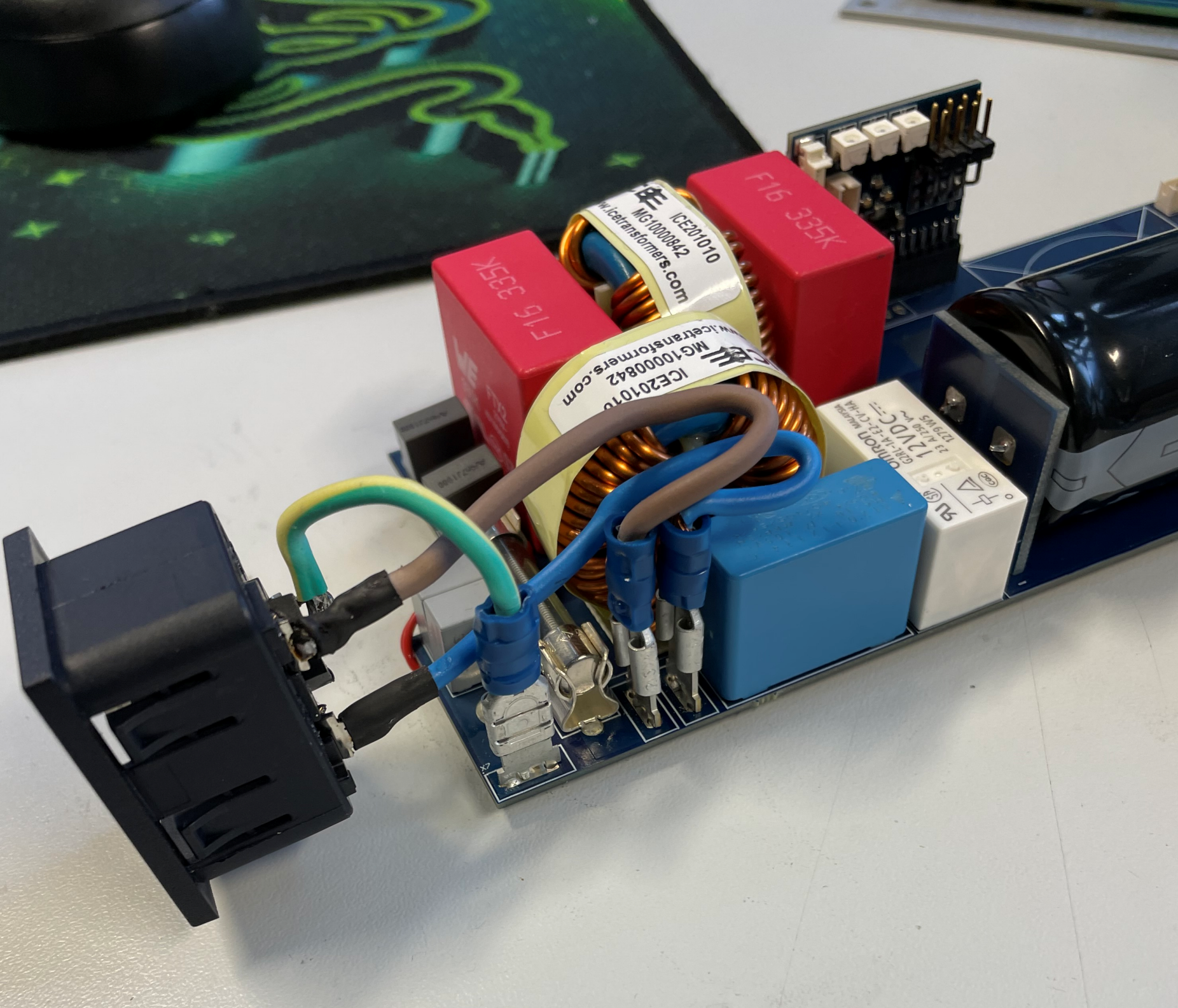
ICE201010
MG10000842
www.icetransformers.com
F16 335K
F15 335K
OMRON
12VDC
G2RL-1A-E-CV-1AA